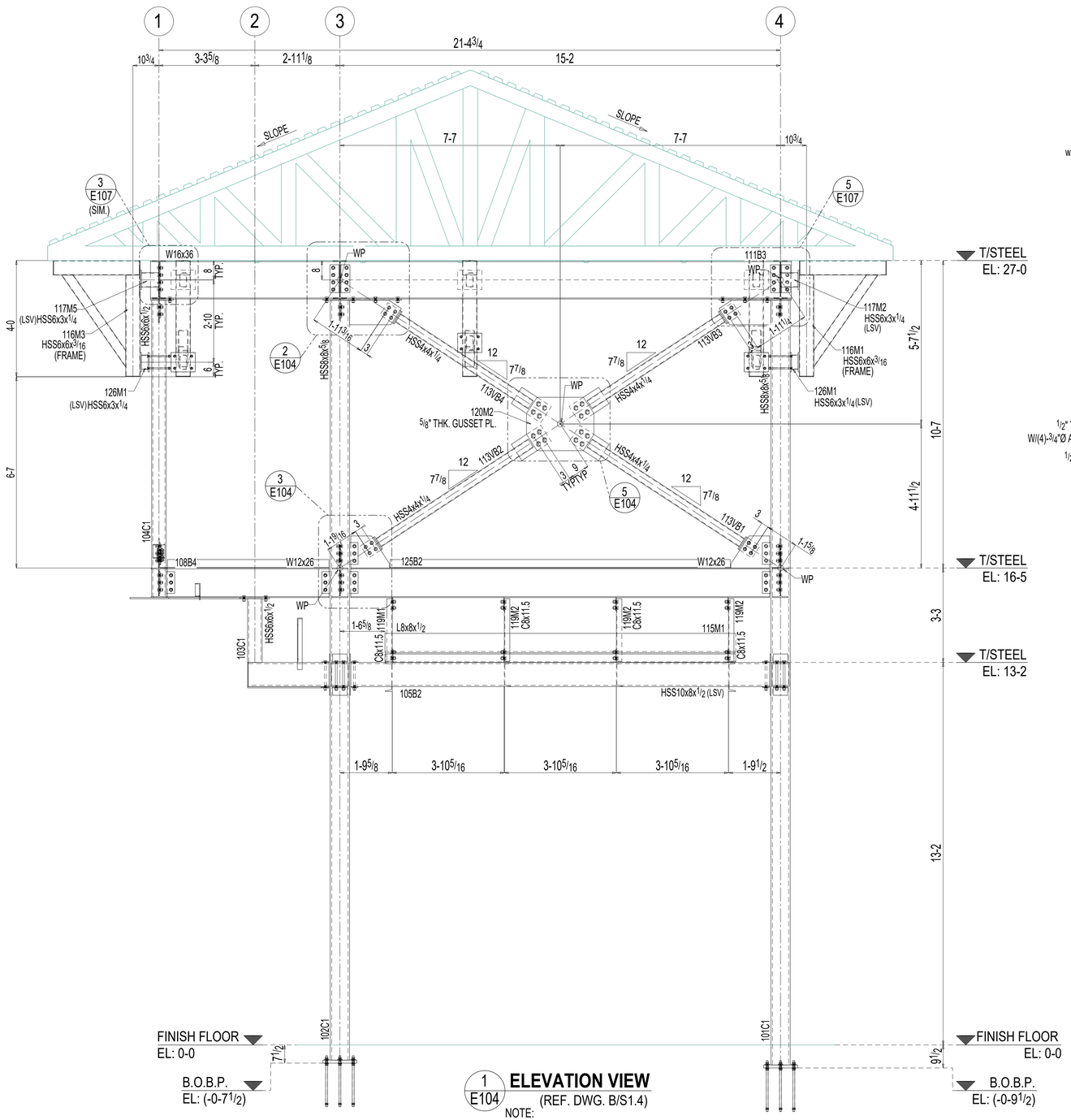

1 E104 **ELEVATION VIEW** (REF. DWG. B/S1.4)

NOTE:
1) LSV : INDICATES LONG SIDE VERTICAL

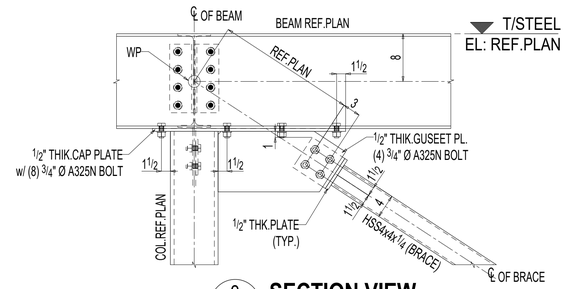

2 E104 **SECTION VIEW** (REF. DWG. 18/S7.0)

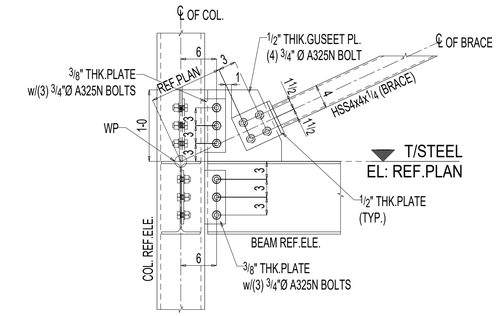

3 E104 **SECTION VIEW** (REF. DWG. 19/S7.0)

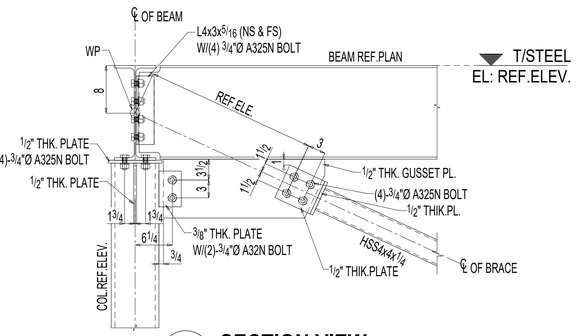

4 E104 **SECTION VIEW** (REF. DWG. 20/S7.0)

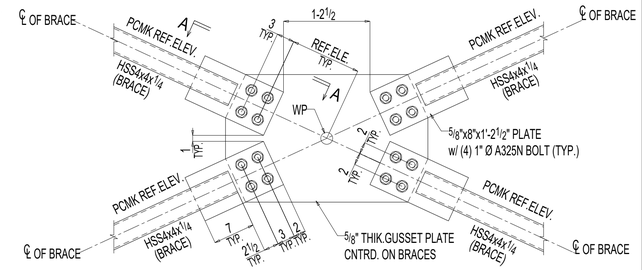

5 E104 **SECTION VIEW** (REF. DWG. 21/S7.0)

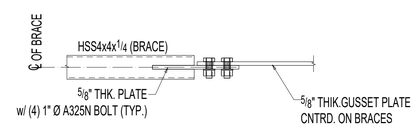

SECTION A-A

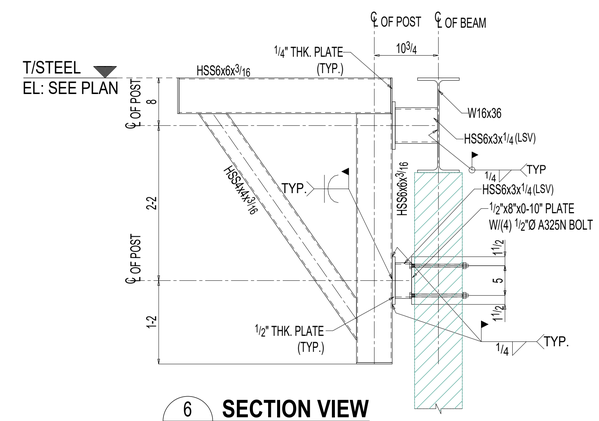

6 E104 **SECTION VIEW**

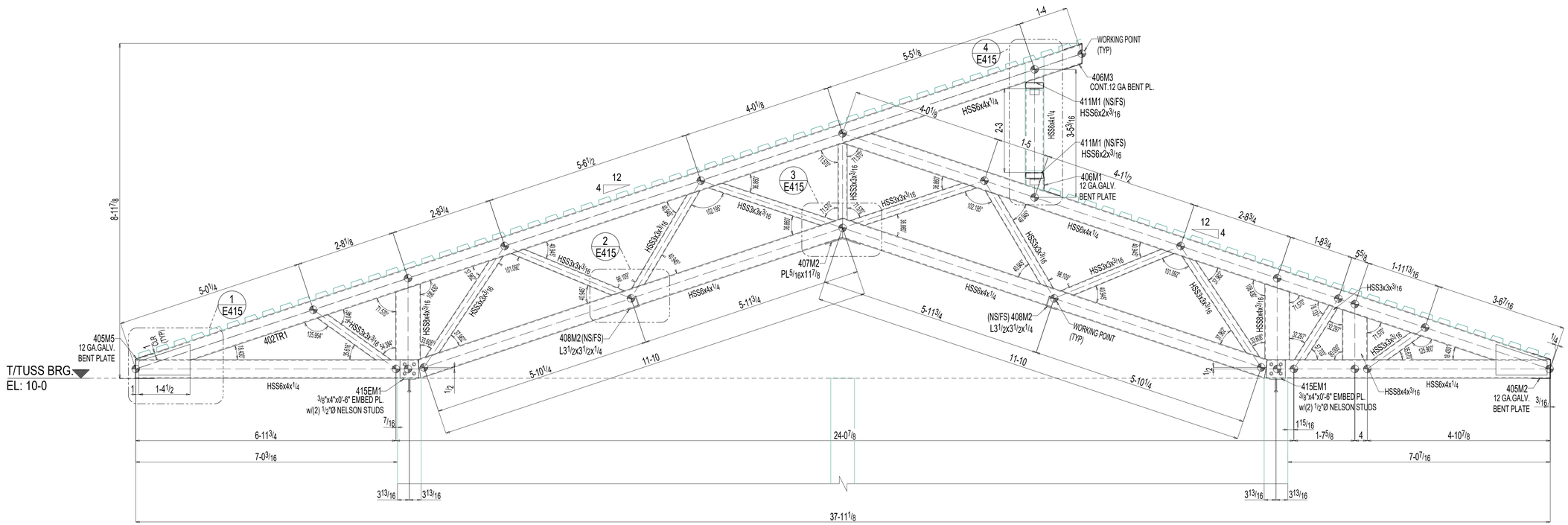

1 E414 **SECTION VIEW**
(REF.DWG. 1/S4.5)