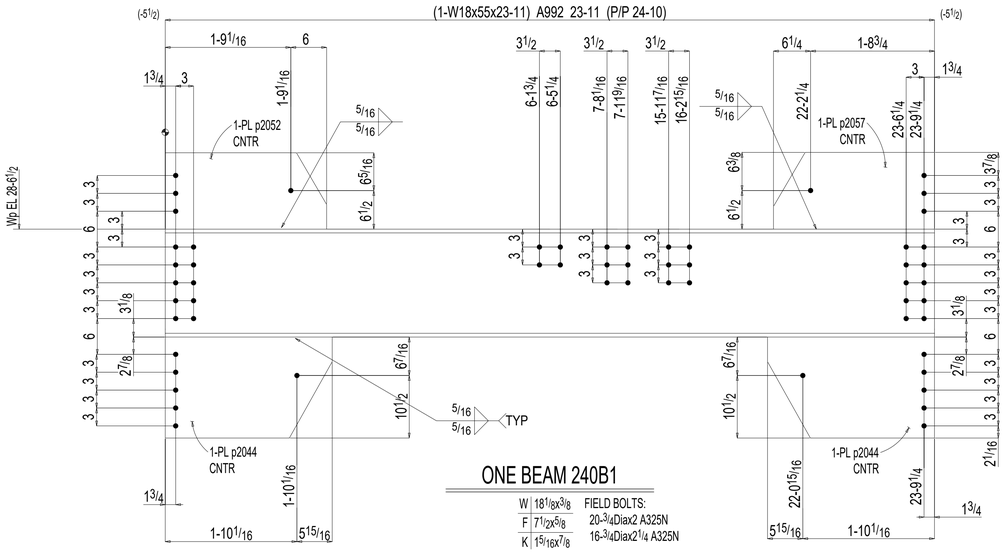

ONE BEAM 240B1

W	$18^{1}/_{8}x^{3}/_{8}$	FIELD BOLTS:
F	$7^{1}/_{2}x^{5}/_{8}$	20-3/4Diax2 A325N
K	$15/_{16}x^{7}/_{8}$	16-3/4Diax2 1/4 A325N

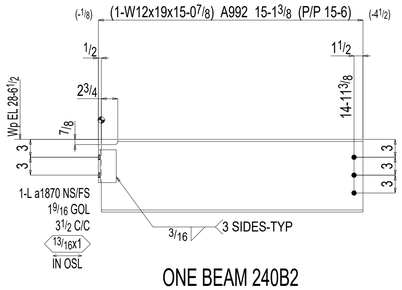

ONE BEAM 240B2

W	$12^{3}/_{16}x^{1}/_{4}$	FIELD BOLTS:
F	$4x^{3}/_{8}$	7-3/4Diax1 3/4 A325N
K	$^{7}/_{8}x^{5}/_{8}$	

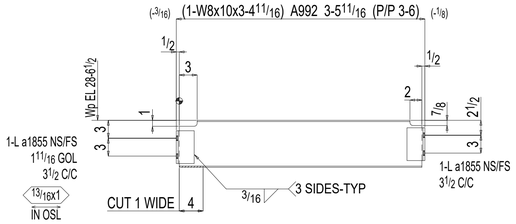

ONE BEAM 240B3

W	$7^{7}/_{8}x^{3}/_{16}$	FIELD BOLTS:
F	$3^{15}/_{16}x^{3}/_{16}$	4-3/4Diax2 1/4 A325N
K	$^{11}/_{16}x^{9}/_{16}$	4-3/4Diax1 3/4 A325N

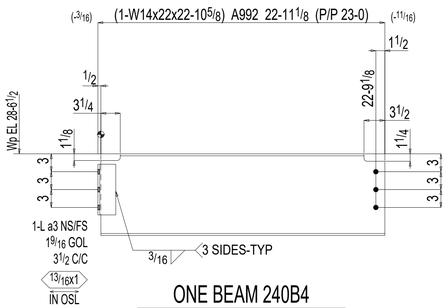

ONE BEAM 240B4

W	$13^{11}/_{16}x^{1}/_{4}$	FIELD BOLTS:
F	$5x^{5}/_{16}$	5-3/4Diax1 3/4 A325N
K	$11/_{16}x^{13}/_{16}$	4-3/4Diax2 1/4 A325N

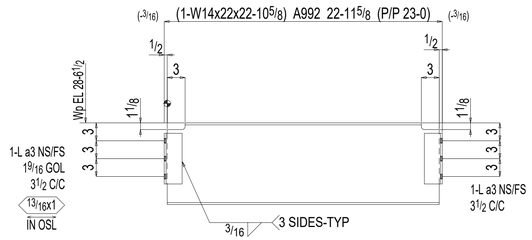

3 BEAMS 240B5

W	$13^{11}/_{16}x^{1}/_{4}$	FIELD BOLTS:
F	$5x^{5}/_{16}$	4-3/4Diax2 1/4 A325N
K	$11/_{16}x^{13}/_{16}$	2-3/4Diax1 3/4 A325N

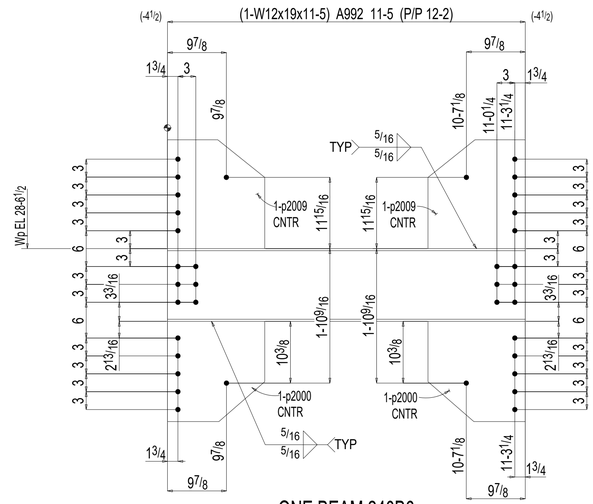

ONE BEAM 240B6

W	$12^{3}/_{16}x^{1}/_{4}$	FIELD BOLTS:
F	$4x^{3}/_{8}$	20-3/4Diax2 1/4 A325N
K	$^{7}/_{8}x^{5}/_{8}$	12-3/4Diax2 A325N

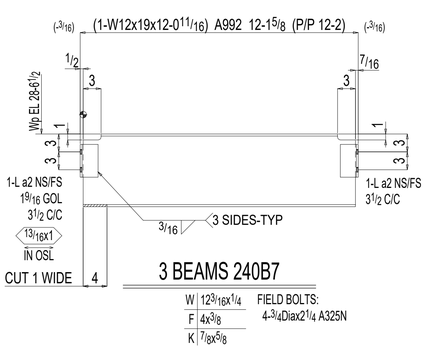

3 BEAMS 240B7

W	$12^{3}/_{16}x^{1}/_{4}$	FIELD BOLTS:
F	$4x^{3}/_{8}$	4-3/4Diax2 1/4 A325N
K	$^{7}/_{8}x^{5}/_{8}$	

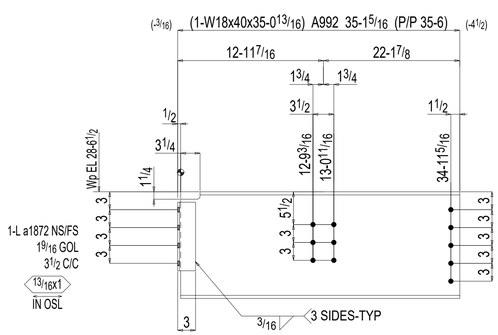

ONE BEAM 240B8

W	$17^{7}/_{8}x^{5}/_{16}$	FIELD BOLTS:
F	$6x^{1}/_{2}$	13-3/4Diax1 3/4 A325N
K	$13/_{16}x^{13}/_{16}$	

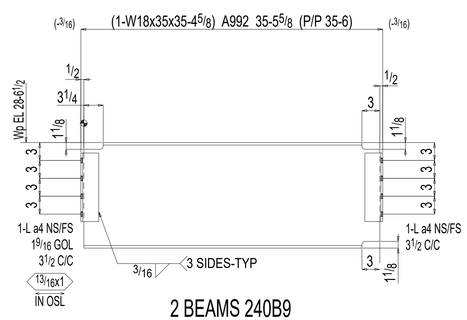

2 BEAMS 240B9

W	$17^{11}/_{16}x^{5}/_{16}$	FIELD BOLTS:
F	$6x^{7}/_{16}$	12-3/4Diax1 3/4 A325N
K	$11/_{8}x^{7}/_{8}$	

BILL OF MATERIAL

PC MARK	QTY TOTAL	DESCRIPTION	LENGTH		MINOR MARK	STEEL GRADE	REMARKS
240B1		ONE BEAM					
	1	W18x55	23	11	240B1	A992	
	2	PL 1/2x16 15/16	2	4	p2044	A36	
	1	PL 1/2x12 7/8	2	3	p2057	A36	
	1	PL 1/2x12 13/16	2	3 1/16	p2052	A36	
		FIELD BOLTS					
	16	3/4 Dia A325N	0	2 1/4			+1HD WASH
	20	3/4 Dia A325N	0	2			+1HD WASH
240B2		ONE BEAM					
	1	W12x19	15	0 7/8	240B2	A992	
	2	L3x3x5/16	0	5 1/2	a1870	A36	
		FIELD BOLTS					
	7	3/4 Dia A325N	0	1 3/4			+1HD WASH
240B3		ONE BEAM					
	1	W8x10	3	4 11/16	240B3	A992	
	4	L3x3x5/16	0	5 1/2	a1855	A36	
		FIELD BOLTS					
	4	3/4 Dia A325N	0	2 1/4			+2HD WASH
	4	3/4 Dia A325N	0	1 3/4			+1HD WASH
240B4		ONE BEAM					
	1	W14x22	22	10 5/8	240B4	A992	
	2	L3x3x5/16	0	8 1/2	a3	A36	
		FIELD BOLTS					
	4	3/4 Dia A325N	0	2 1/4			+2HD WASH
	5	3/4 Dia A325N	0	1 3/4			+1HD WASH
240B5	3	BEAM					
	3	W14x22	22	10 5/8	240B5	A992	
	12	L3x3x5/16	0	8 1/2	a3	A36	
		FIELD BOLTS					
	24	3/4 Dia A325N	0	2 1/4			+2HD WASH
	6	3/4 Dia A325N	0	1 3/4			+1HD WASH
240B6		ONE BEAM					
	1	W12x19	11	5	240B6	A992	
	2	PL 1/2x16 5/16	1	6 1/4	p2009	A36	
	2	PL 1/2x16 5/16	1	4 13/16	p2000	A36	
		FIELD BOLTS					
	20	3/4 Dia A325N	0	2 1/4			+1HD WASH
	12	3/4 Dia A325N	0	2			+1HD WASH
240B7	3	BEAM					
	3	W12x19	12	0 11/16	240B7	A992	
	12	L3x3x5/16	0	5 1/2	a2	A36	
		FIELD BOLTS					
	12	3/4 Dia A325N	0	2 1/4			+2HD WASH
240B8		ONE BEAM					
	1	W18x40	35	0 13/16	240B8	A992	
	2	L3x3x5/16	0	11 1/2	a1872	A36	
		FIELD BOLTS					
	13	3/4 Dia A325N	0	1 3/4			+1HD WASH
240B9	2	BEAM					
	2	W18x35	35	4 5/8	240B9	A992	
	8	L3x3x5/16	0	11 1/2	a4	A36	
		FIELD BOLTS					
	24	3/4 Dia A325N	0	1 3/4			+1HD WASH
							Total weight : 8998