BILL OF MATERIAL

LINE #	SEQUENCE	QTY TOTAL	PC MARK	DESCRIPTION	LENGTH		ADVANCE MILL #	REMARKS	WEIGHT TOTAL
	1	6	CB50-1	MISC					29452
		6	CB50-1	W27x84	53	8		A992	27048
		6	L1081	L5x5x1/2	0	11 3/4		A36	95
		6	L1082	L5x5x1/2	0	11 3/4		A36	95
		12	L1032	L5x5x1/2	0	10		A36	162
		12	p10917	PL 1/2x21 15/16	2	3 1/2		A36	1026
		12	p10918	PL 1/2x10 15/16	2	3 1/2		A36	513
		12	p10919	PL 1/2x10 15/16	2	3 1/2		A36	513
				FIELD BOLTS					
		12		3/4 Dia A307	0	2 1/4		+1HD WASH	

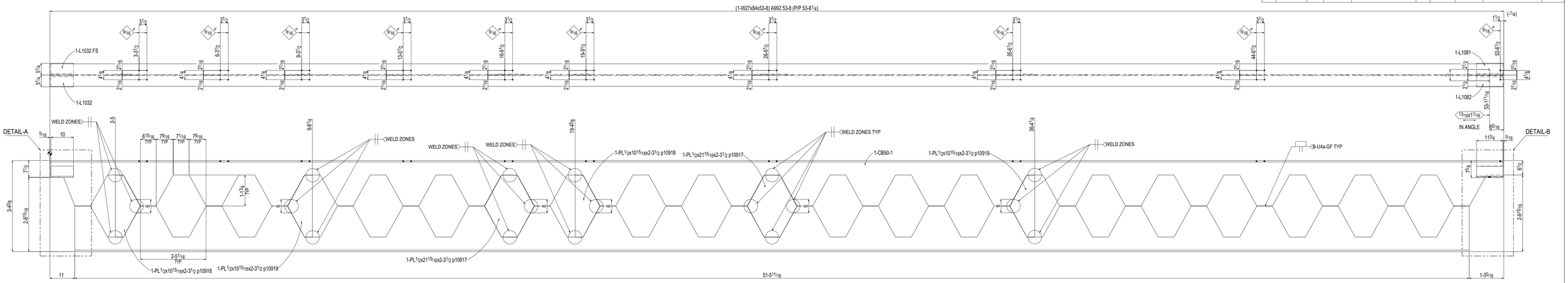

6 MISCS CB50-1

FIELD BOLTS:
1-3/4Diax2 1/4 A325
1-3/4Diax2 1/2 A325

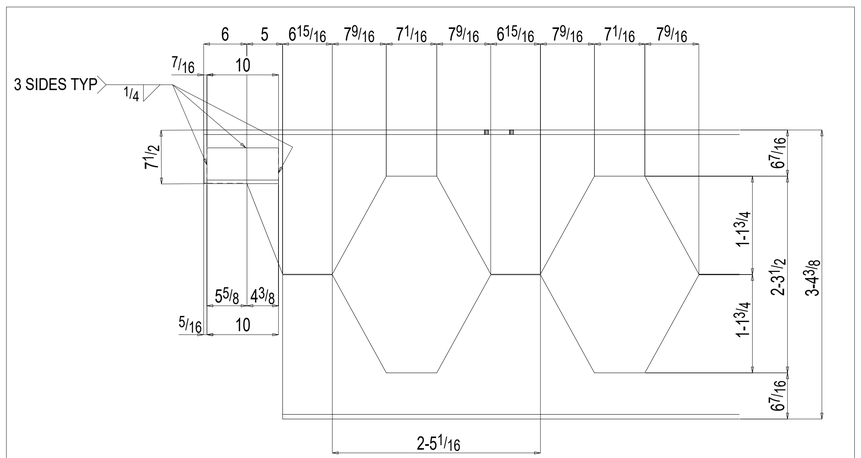

Detail A
CB50-1

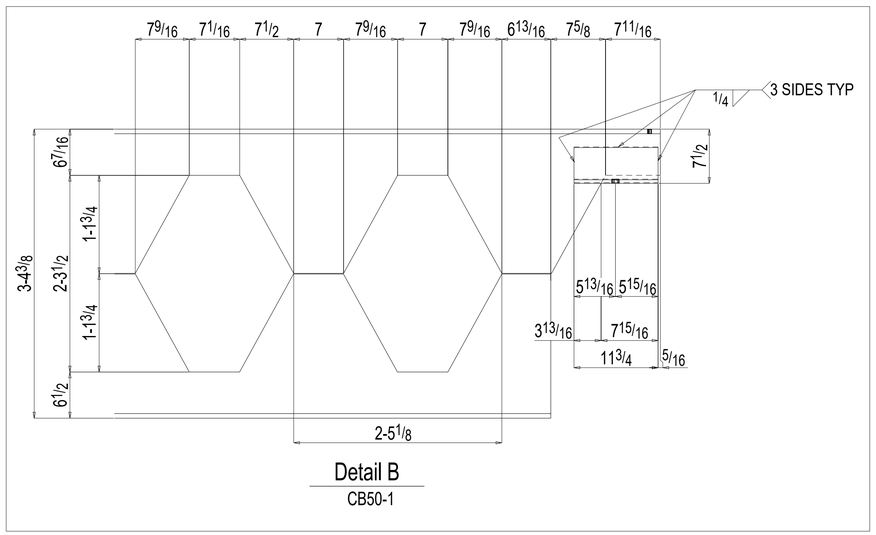

Detail B
CB50-1