BILL OF MATERIAL

QTY	SHIP	MARK	GRD	DESCRIPTION	LENGTH		REMARKS	WT
ONE 12C1				COLUMN			Galv	833
1		hss85_1	A500C	HSS10x6x3/8	18	4 1/4	S2E	692
1		a7_1	A36	L6x4x1/2	0	9		12
1		a8_1	A36	L6x4x1/2	0	9		12
3		a2_1	A36	L4x3x3/8	0	6		13
1		p438_1	A36	PL3/4x13	1	2		39
1		p462_1	A36	PL1/2x7	1	7 1/2		19
1		p242_1	A36	PL3/8x16 13/16	1	5 1/8		31
1		p405_1	A36	PL1/4x6	0	10		4
8		p5_1	A36	PL1/4x3 1/2	0	5 1/2		11
ONE 12C2				COLUMN			Galv	833
1		hss83_1	A500C	HSS10x6x3/8	18	4 5/16	S2E	692
1		a7_1	A36	L6x4x1/2	0	9		12
1		a8_1	A36	L6x4x1/2	0	9		12
3		a2_1	A36	L4x3x3/8	0	6		13
1		p431_1	A36	PL3/4x13	1	2		39
1		p462_1	A36	PL1/2x7	1	7 1/2		19
1		p229_1	A36	PL3/8x16 7/8	1	5 9/16		31
1		p405_1	A36	PL1/4x6	0	10		4
8		p5_1	A36	PL1/4x3 1/2	0	5 1/2		11

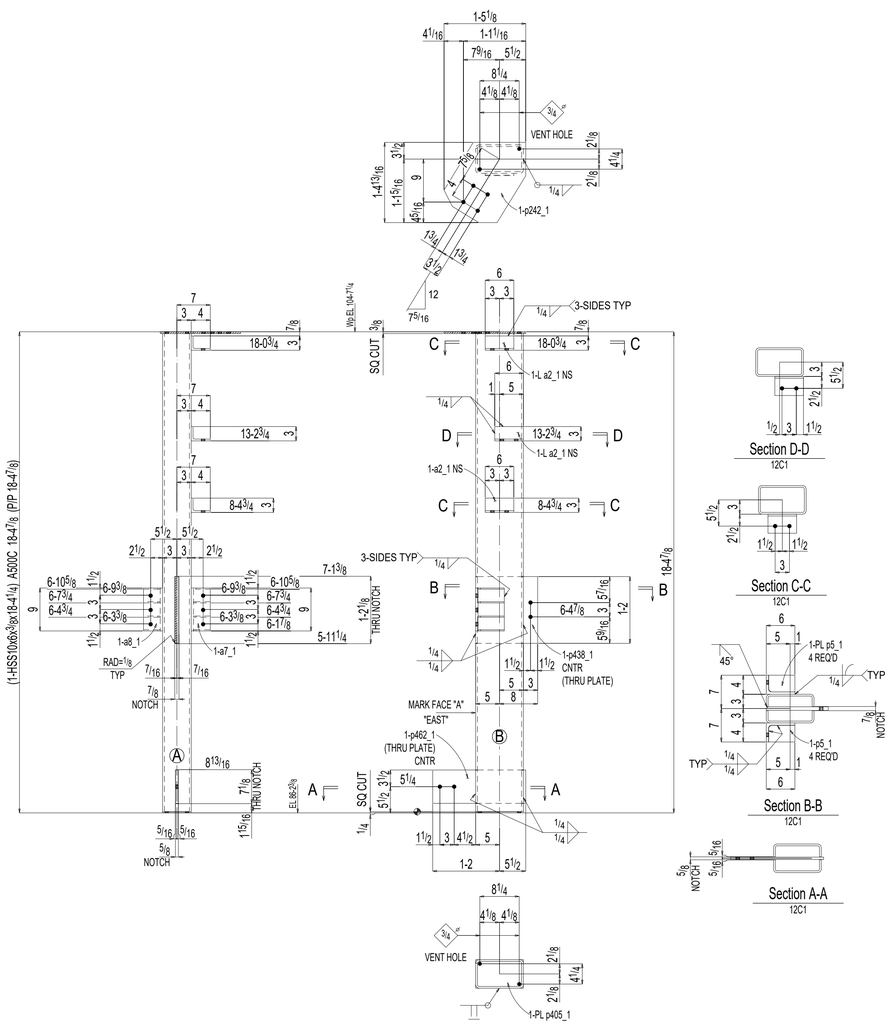

ONE COLUMN 12C1

AT GRID:
12 & E

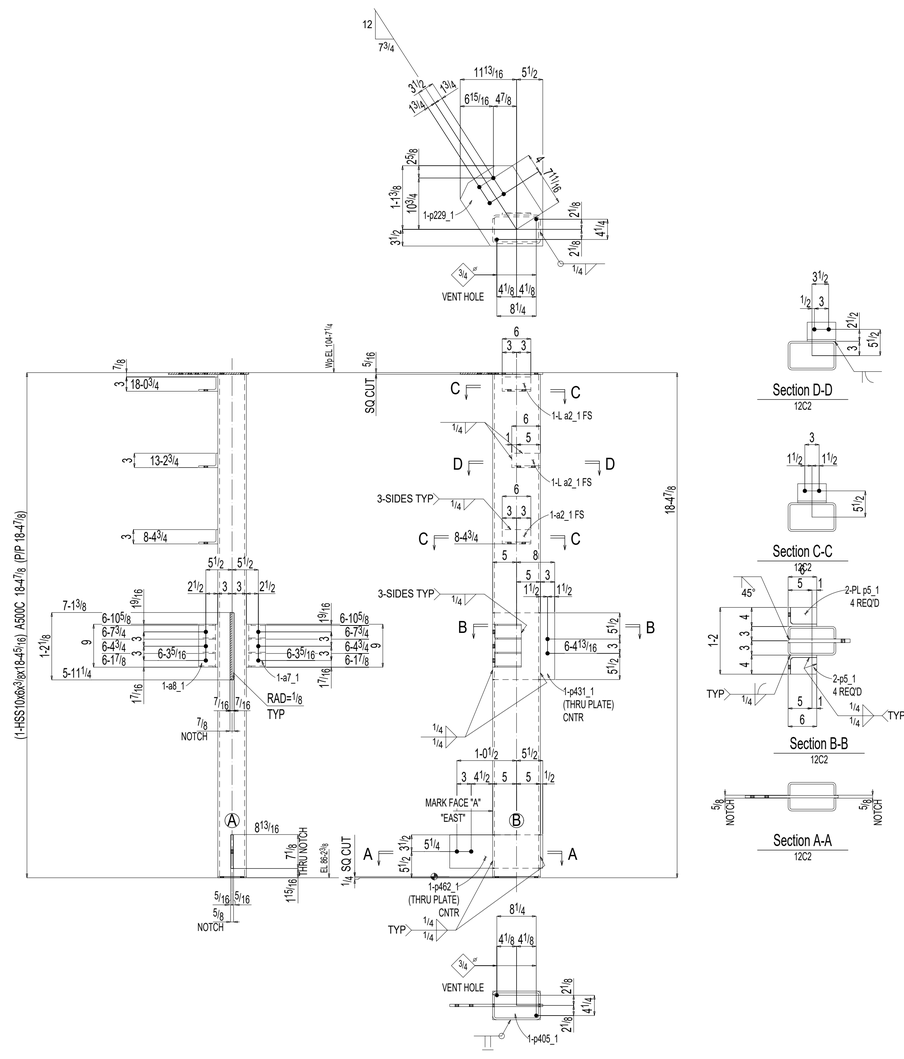

ONE COLUMN 12C2

AT GRID:
12 & D